NOTES:

VCC = 3.3V (MODULE POWER FROM ON-BOARD REGULATOR)
VDD = 5V (USB POWER)

D1 - BLUE LED (RSSI)
D2 - RED LED (ASSOCIATE)
D3 - YELLOW LED (POWER)
D4 - GREEN LED (ON / NOT IN SLEEP MODE)
D5 - RED LED (USB TX)
D6 - GREEN LED (USB RX)

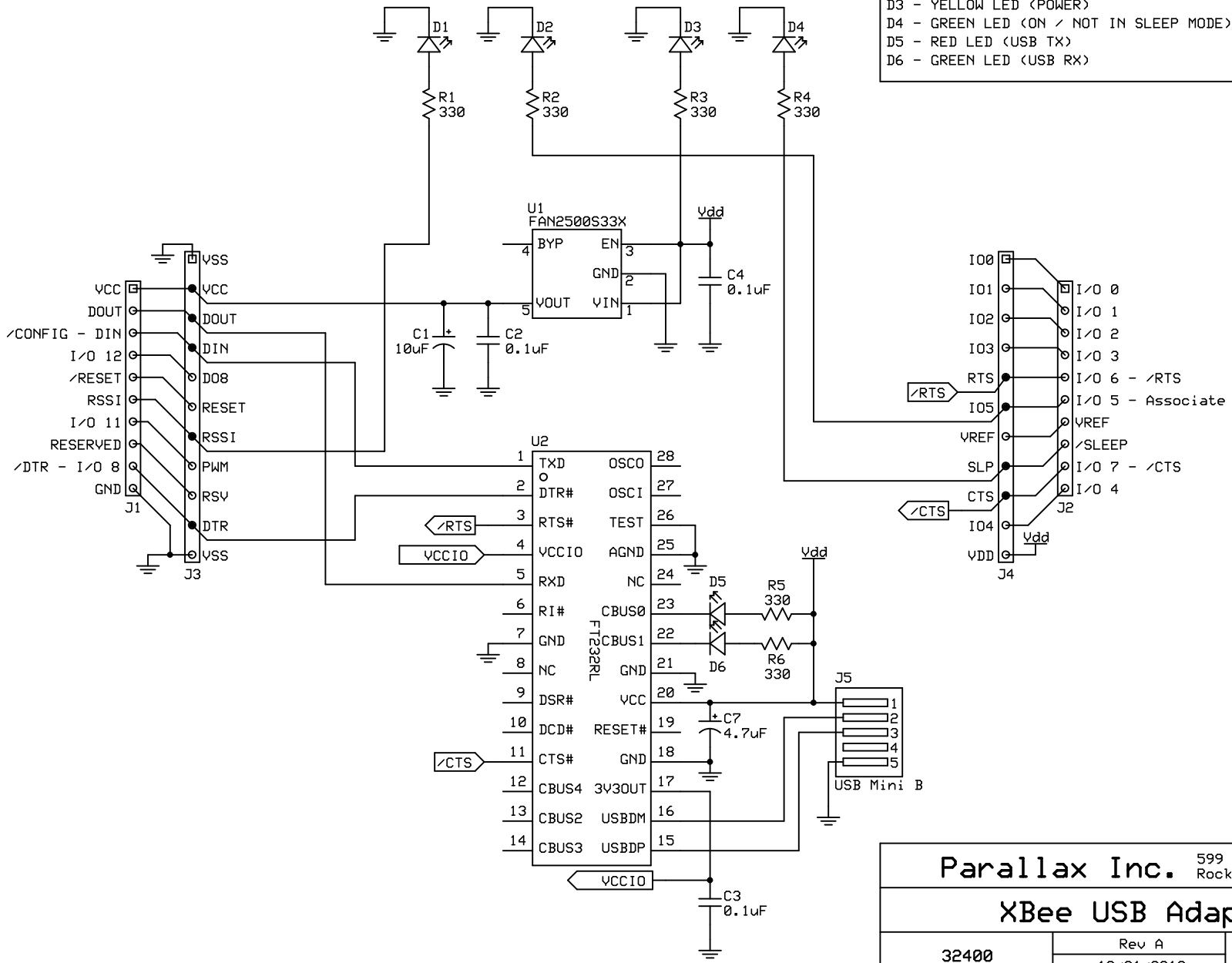

Parallax Inc. 599 Menlo Drive Rocklin, CA 95765		
XBee USB Adapter		
32400	Rev A 10/01/2010	Page 1 of 1