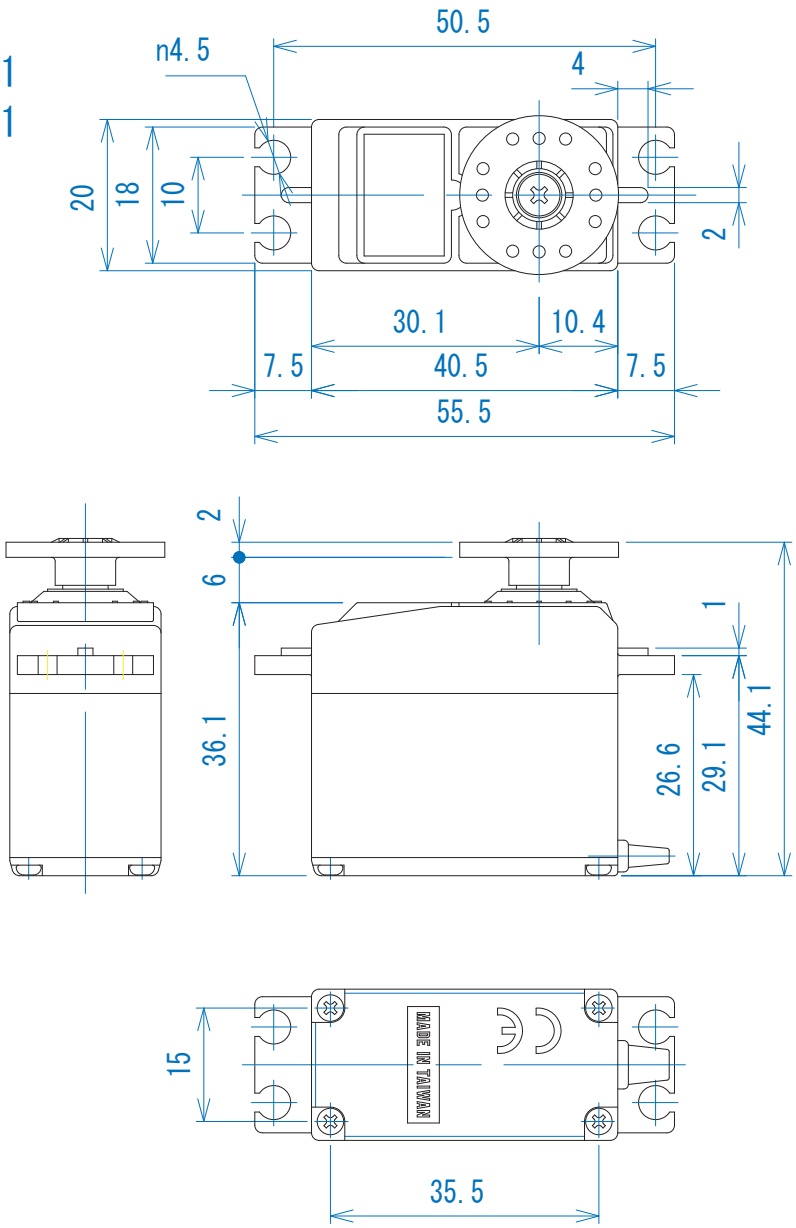S148
S3001
S9001